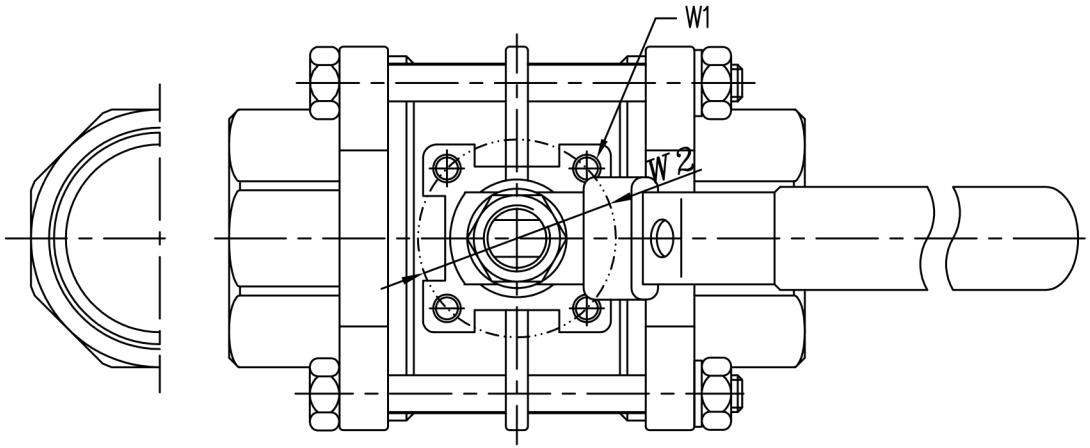

SIZE	d	L	H	D1	S	W1	W2	D
1/4"	11.0	*56.6	54	102	13	M5*0.8	36	1/4" DIN 2999
3/8"	12.5	*56.6	54	102	13	M5*0.8	36	3/8" DIN 2999
1/2"	15.0	*65.7	55	102	13	M5*0.8	36	1/2" DIN 2999
3/4"	20.0	76.2	62	126	17	M5*0.8	36	3/4" DIN 2999
1"	25.4	86.2	66	126	19	M5*0.8	36	1" DIN 2999
11/4"	32.0	102.8	90	154	27	M6*1.0	50	11/4" DIN 2999
11/2"	40	119.4	93	154	26	M6*1.0	50	11/2" DIN 2999
2"	50.8	131.4	102	188	24	M6*1.0	50	2" DIN 2999
21/2"	65.0	164	121	265	39	M8*1.25	70	21/2" DIN 2999
3"	80.0	182.7	134	265	37	M10*1.5	102	3" DIN 2999
4"	100.0	*236.2	175	272	50	M10*1.5	102	4" DIN 2999

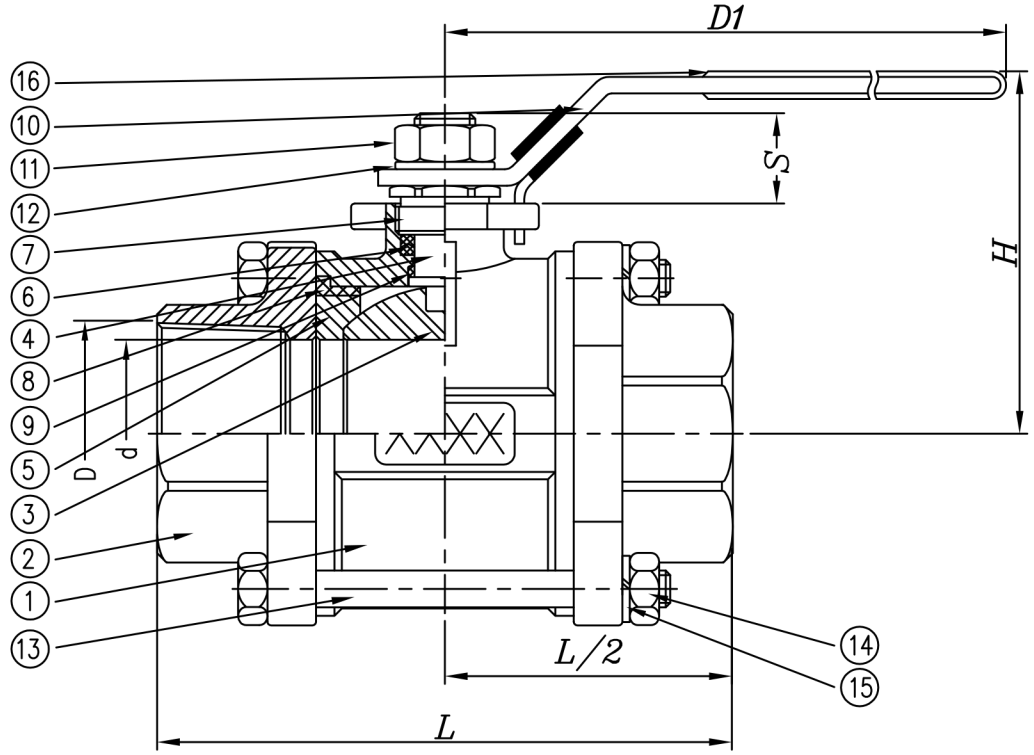

NO.	PART NAME	MATERIAL		QTY
		STAINLESS STEEL	CARBON STEEL	
1	BODY	ASTM A351 Gr.CF8M	ASTM A216 WCB	1
2	CAP	ASTM A351 Gr.CF8M	ASTM A216 WCB	2
3	BALL	ASTM A351 Gr.CF8M	ASTM A351 Gr.CF8	1
4	STEM	ASTM A276 Gr.316	ASTM A276 Gr.304	1
5	BALL SEATS	PTFE	PTFE	2
6	STEM PACKING	PTFE	PTFE	1
7	GLAND	S.S.304	S.S.304	1
8	END SEALS	PTFE	PTFE	2
9	THRUST WASHER	PTFE	PTFE	1
10	HANDLE	S.S.304	S.S.304	1
11	HANDLE NUT	S.S.304	S.S.304	1
12	HANDLE WASHER	S.S.304	S.S.304	1
13	BOLTS	S.S.304	S.S.304	4-6
14	BOLTS NUTS	S.S.304	S.S.304	4-6
15	BOLTS WASHERS	S.S.304	S.S.304	4-6
16	HANDLE SLEEVE	VINYL GRIP	VINYL GRIP	1

REV	DATE	DESCRIPTION	CODE	REVISER	REMARKS

MATERIAL	APPROVE		CHECK	
	SCALE	FREE	UNIT	mm
	PART NO.	AF-31		
OTHER	DWG NO	AF-31	TITLE	3-PC BALL VALVE

REV	B
DRAWN BY	Kevin
DATE	2004.06.16
Q'TY	