STAINLESS STEEL
THREADED & SOCKET WELDED
FREE FLOW / PNEUMATIC ON-OFF VALVE

SERIES : 401

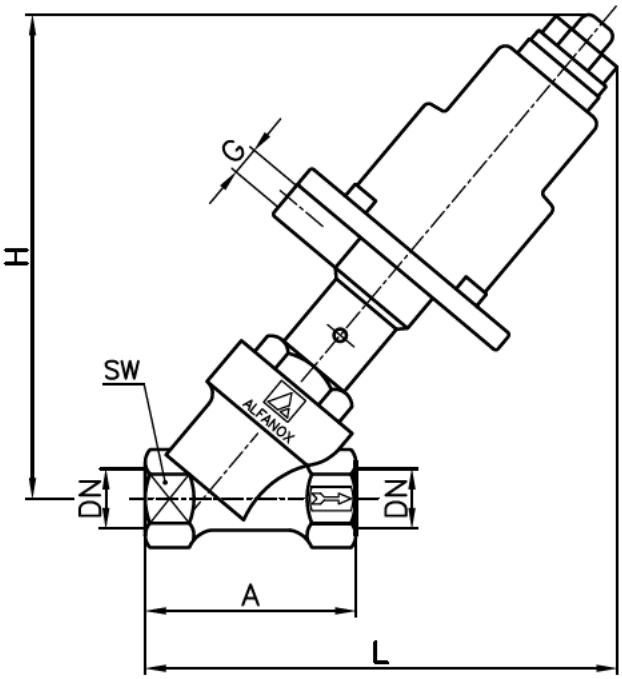

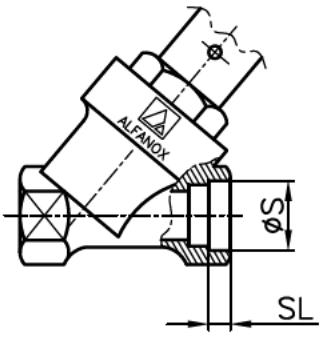

SOCKET WELDED

APPLICATION
Pneumatically operated angle seat valve for inert and corrosive liquids and gases.

DIMENSION
DN 15 (½") / DN 50 (2")

OPERATING FEATURES
Operating pressure (Δp): See data list.
Control pressure : Minimum 5 bar / Maximum 10 bar
Operating temperature : -10°C / 180°C

DN		PISTON	Δp bar	A	L	H	G	SW	ØS	SL	Kv m³/h	WEIGHT (KG)
15	1/2"	Ø 50	20	65	160	165	G 1/8"	27	21,5	6	4,9	1,35
		Ø 63	35		170	175						1,55
20	3/4"	Ø 50	12	75	165	165		32	26,9		7,6	1,50
		Ø 63	16		175	175						1,70
25	1"	Ø 50	7	90	170	170		39	33,6		13,7	1,65
		Ø 63	14		180	185						1,90
		Ø 80	19		195	190						2,70
32	1 1/4"	Ø 63	9	110	200	195		50	42,7		20,7	2,50
		Ø 80	14		215	205						2,70
		Ø 100	27		235	225						3,30
40	1 1/2"	Ø 63	6	120	205	200		55	48,6		34,2	3,00
		Ø 80	10		220	210						3,60
		Ø 100	18		240	230						4,35
50	2"	Ø 80	6	150	230	220		68	60,6		48,6	4,70
		Ø 100	10		250	240						6,15

SEAT SEAL	
E	EPDM
T	PTFE
V	VITON

DIMENSION - DN	
015	DN 15
020	DN 20
025	DN 25
032	DN 32
040	DN 40
050	DN 50

ACTUATOR Ø	
050	Ø 50 mm
063	Ø 63 mm
080	Ø 80 mm
100	Ø 100 mm

BODY ATTACHMENTS	
00	Threaded
77	Welding socket

401						

CONTROL TYPE	
K	Normally closed
A	Normally open
C	Double effect

OPTIONS	
D	Standard
V	With handwheel
S	With switch
T	Stroke limited

EXAMPLE

401	T	032	080	K	V	00

Series 401
Seat seal : PTFE
DN 32
Actuator : Ø80
Normally closed
With handwheel
Threaded

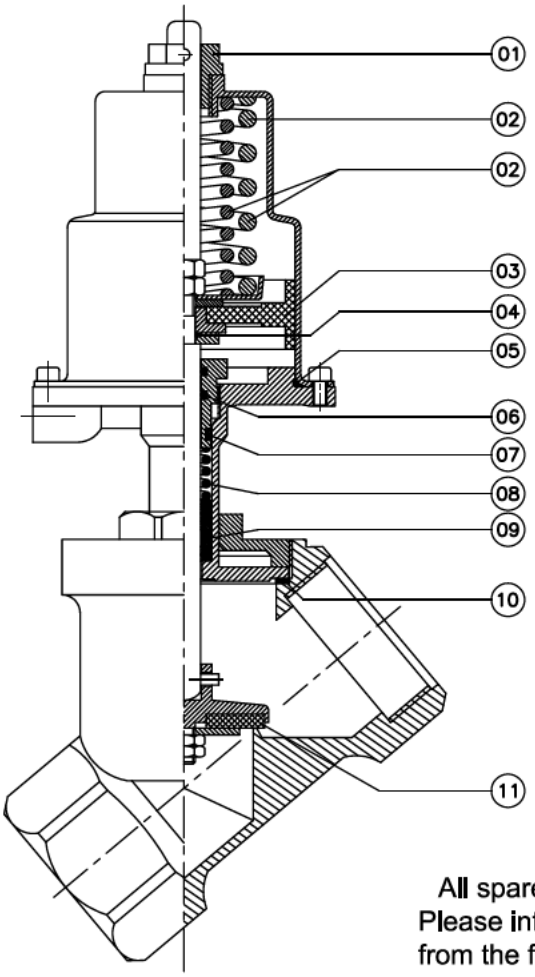

INSTRUCTIONS :

1. Valve can be fitted in any position.
2. Flow direction should be as indicated by an arrow on the body.
3. Working pressure for each size of valve should not be exceed the limits indicated in the chart.
4. Control pressure should not exceed the maximum and should not go lower then the minimum value.
5. CAUTION : Never fasten or remove the assembly nut prior to applying pressurized air.

All spare parts are avaliable directly from the stocks.
Please inform the code number of the material required from the following chart (i.e. YYP 050, CGT 025, ...)

ACTUATOR and STUFFING BOX GROUP						
PART NO	PART NAME	MATERIAL	ACTUATOR			
			Ø50	Ø63	Ø80	Ø100
01	UPPER SPINDLE GUIDE	NYLON 66	KPS 020			
02	SPRING (SINGLE)	INOX	YYP 050	YYP 063	-	-
02	SPRING (DOUBLE)	INOX	-	-	YYP 080	YYP 100
03	PISTON GROUP	NBR+BRASS	PST 050	PST 063	PST 080	PST 100
04	PISTON O-RING	NBR	ORN 010	ORN 008		
05	CYLINDER O-RING	SILICONE	ORS 045	ORS 058	ORS 075	ORS 095
06	STUFFING BOX O-RING	SILICONE	ORS 012			
07	STUFFING BOX GASKET	SILICONE	SCS 012			
08	STUFFING BOX SPRING	INOX	YYP 012			
09	STUFFING BOX V-CHEVRON	PTFE	SAT 012			

BODY GROUP								
PART NO	PART NAME	MATERIAL	VALVE DIMENSION					
			DN 15	DN 20	DN 25	DN 32	DN 40	DN 50
10	BODY SEALING GASKET	PTFE	CGT 015	CGT 020	CGT 025	CGT 032	CGT 040	CGT 050
		SILICONE	CGS 015	CGS 020	CGS 025	CGS 032	CGS 040	CGS 050
11	SEAT SEAL	EPDM	KEE 015	KEE 020	KEE 025	KEE 032	KEE 040	KEE 050
		PTFE	KET 015	KET 020	KET 025	KET 032	KET 040	KET 050
		VITON	KEV 015	KEV 020	KEV 025	KEV 032	KEV 040	KEV 050

ATTENTION : Since, continuous dynamic spring power exists in the pneumatic actuator of the normally closed valves, maximum care should be taken when trying to reach the spring or the pneumatic piston.

ATTENTION ! Actuator is under spring tension.

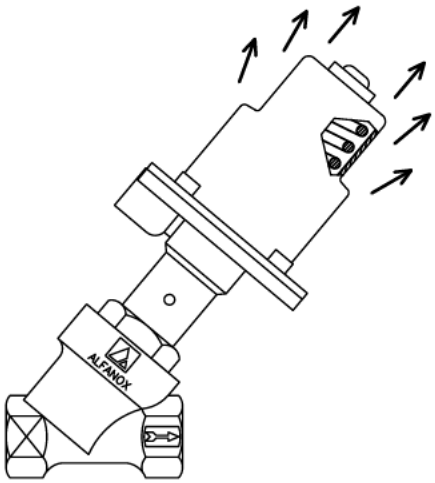

When changing the seat seal (sealing element),

A) Get the valve open by applying pressurized air and see the upper spindle of the valve coming out. In order to prevent the damage to the plastic guide, place a proper washer on the spindle and insert a pin into the hole.

B) When pressurized air removed, the pin placed on the spindle steps on the washer and holds the dynamic spring power, consequently the assembly nut may easily be opened and removed from valve body.
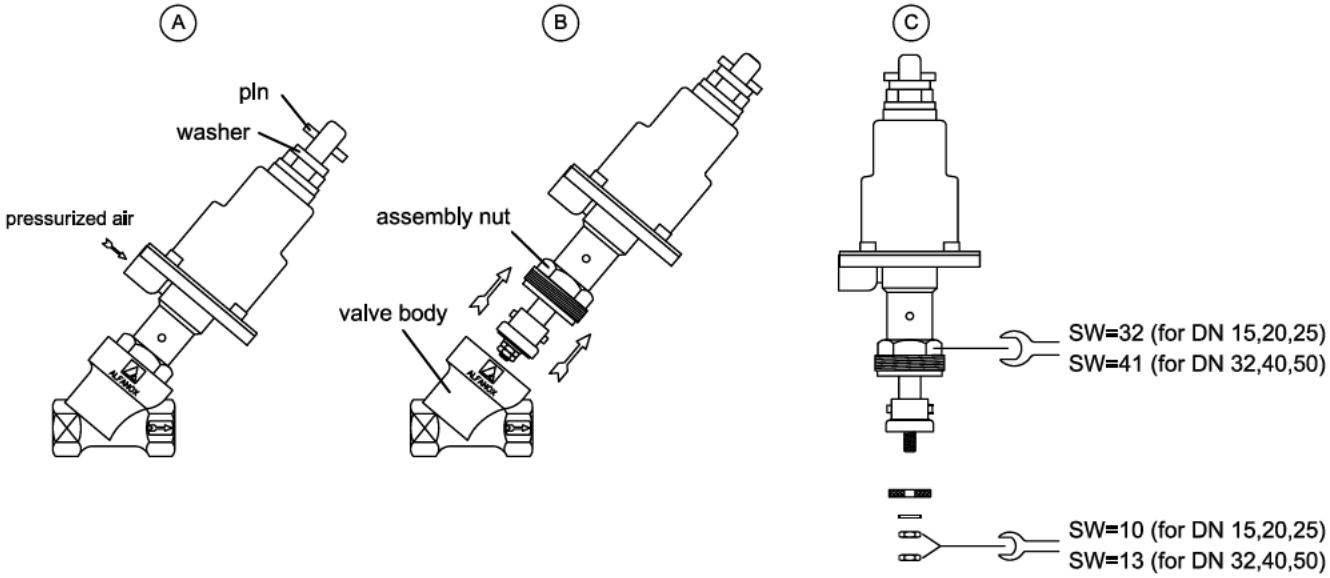
C) Remove the two nuts and one washer on the seat seal. Place new seat seal into recess of valve plug. Apply all instructions in reverse (starting from the last one to the first) and assemble the valve.