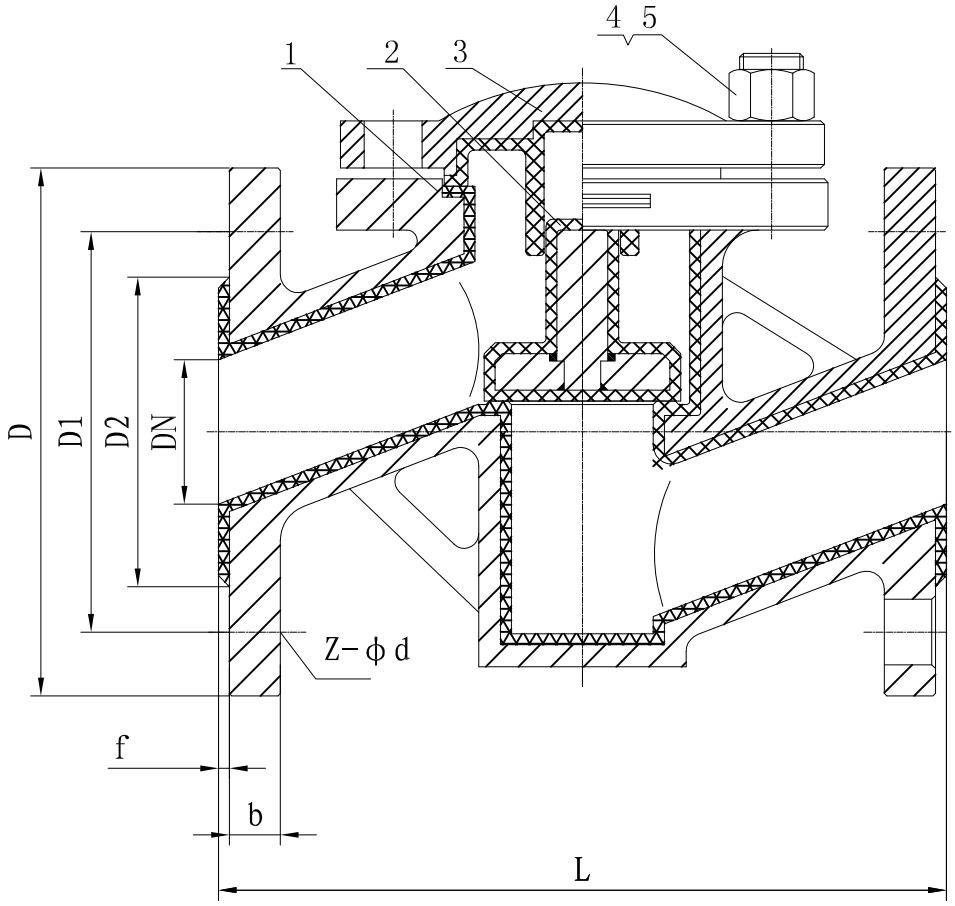

Standards	
Design And Manufacture	HG/T 3704-2005
Inspection And Test	GB/T 13927
Face To Face Dimension	DIN 3201 F1
Connection Dimension Flagned Type	HG/T 20592-1997

Test Specificiation		
Shell Test Pressure	Water	1.5 MPa
Seal Test Pressure		1.0MPa
Seal Test Pressure	Air	0.6 MPa
Spare test		15KV DC
Suitable Working Temperature		-20~180° C
Applicable Medium:	CORROSSION MEDIUM	

DN	L	D	D1	D2	f	b	z-ϕd
15	130	95	65	45	3	12	4-ϕ14
20	150	105	75	55	3	12	4-ϕ14
25	160	115	85	65	3	13	4-ϕ14
32	180	140	100	78	3.5	13	4-ϕ18
40	200	150	110	85	3.5	14	4-ϕ18
50	230	165	125	100	3.5	15.5	4-ϕ18
65	290	185	145	120	3.5	16	4-ϕ18
80	310	200	160	135	3.5	17	8-ϕ18
100	350	220	180	155	4	20	8-ϕ18

NO.	NAME	MATERIAL	NO.	NAME	MATERIAL
3	Bonnet	WCB+PFA			
2	Disc	WCB+PFA	5	Nut	SS304
1	Body	A216 WCB+PFA	4	Bolt	SS304

Description:

HG/T 20592-1997

Globe valve

YFM Valve Co.,Ltd