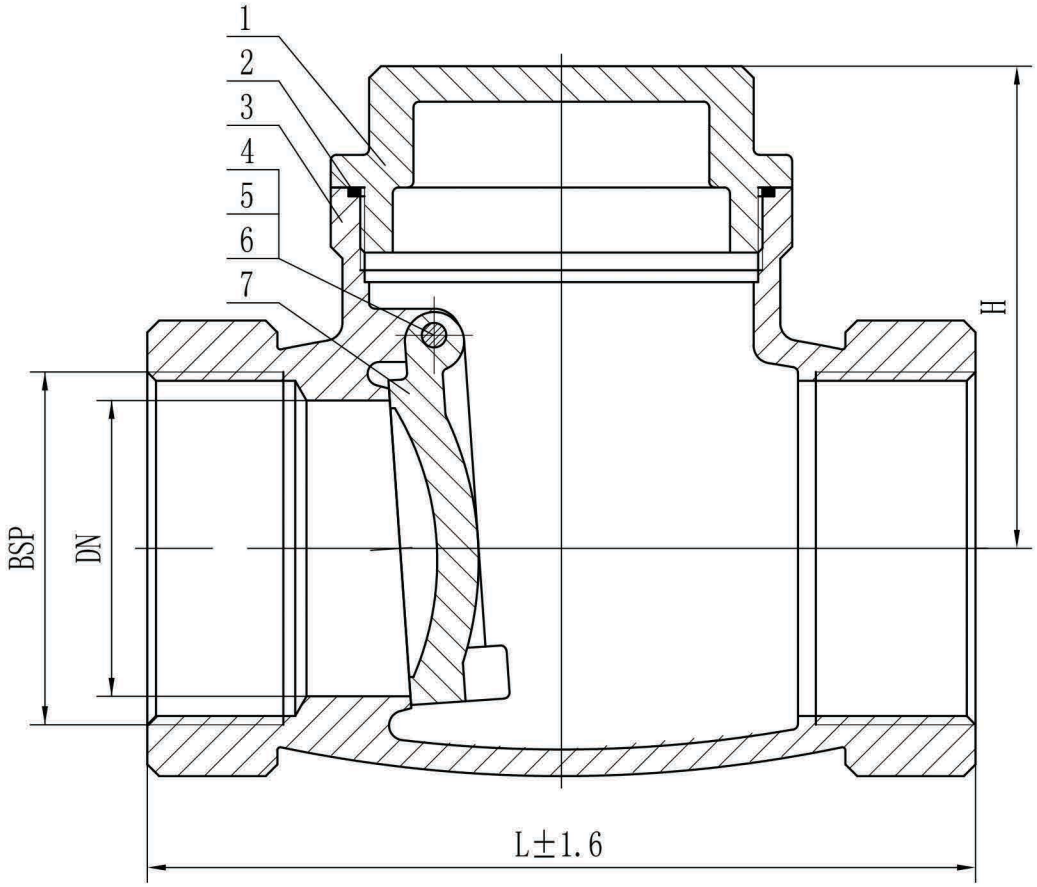

NO	Parts Name	Material
1	Cap	A351 CF8
2	Gasket	PTFE
3	Body	A351 CF8
4	Hanger Pin	A276 304
5	Bolt	A193 B8
6	Gasket	PTFE
7	Disc	A351 CF8

dimensions unit:mm

DN	BSP	L	H
15	$\frac{1}{2}''$	65	40
20	$\frac{3}{4}''$	80	50
25	1″	90	58
32	$1\frac{1}{4}''$	103	60
40	$1\frac{1}{2}''$	120	72
50	2″	140	80

Specification Standard Sheet		
Shell Test Pressure	2.1	MPa
High Pressure Seal Test	1.54	
Backseat Seal Test		
Air Test Pressure	0.6	
Applicable Temperature	-29~150° C	
Applicable Medium	Water, Steam, Oil, etc	
Design and manufacture	API 6D	
Face to face	ASME B16.10	
Threaded End	ASME B1.20.1	
Pressure test	API 598	
CHECK VALVE	200PSI-BSP	

NO.	DATE	DESCRIPTION	PRP'D	REV'D	APP'D

RC1M14-316