| Serial No. | Part Name | Material |
|---|---|---|
| 6 | BOLT | A193-B8 |
| 5 | BONNET | F316 |
| 4 | BONNET GASKET | SS+Graphite |
| 3 | SPRING | A276-410 |
| 2 | DISC | F316 |
| 1 | BODY | F316 |

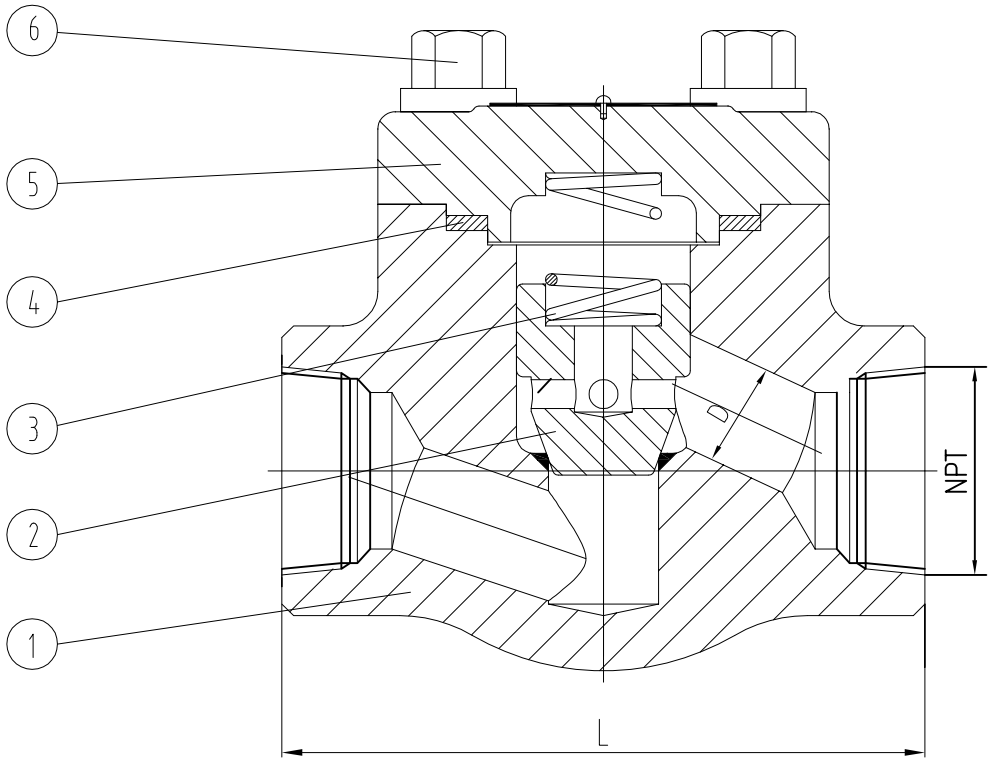


dimensions unit: mm

| SIZE | L | D | NPT |
|---|---|---|---|
| 1/2" | 79 | 10 | 1/2" |
| 3/4" | 92 | 13 | 3/4" |
| 1" | 111 | 17 | 1" |
| 1-1/4" | 120 | 22 | 1-1/4" |
| 1-1/2" | 152 | 26 | 1-1/2" |
| 2" | 172 | 34 | 2" |

| Specification Standard Sheet | | |
|---|---|---|
| Shell Test Pressure | 19.5 | MPa |
| High Pressure Seal Test | 14.3 | |
| Backseat Seal Test | -- | |
| Air Test Pressure | 0.6 | |
| Applicable Temperature | -29~500°C | |
| Applicable Medium | Water, Steam, Oil, etc | |
| Design and manufacture | API 602 | |
| Face to face | ASME B16.10 | |
| | | |
| Pressure test | API 598 | |
| CHECK VALVE 800LB-NPT | | |

| NO. | DATE | DESCRIPTION | PRP'D | REV'D | APP'D |
|---|---|---|---|---|---|
| | 2015-08-14 | | | | |

# RD800NPT-316
# 1/2"-2"

ASSEMBLING DRAWING