Serial No.	Part Name	Material
6	BOLT	A193-B8
5	BONNET	F316
4	BONNET GASKET	SS+Graphite
3	SPRING	A276-410
2	DISC	F316
1	BODY	F316

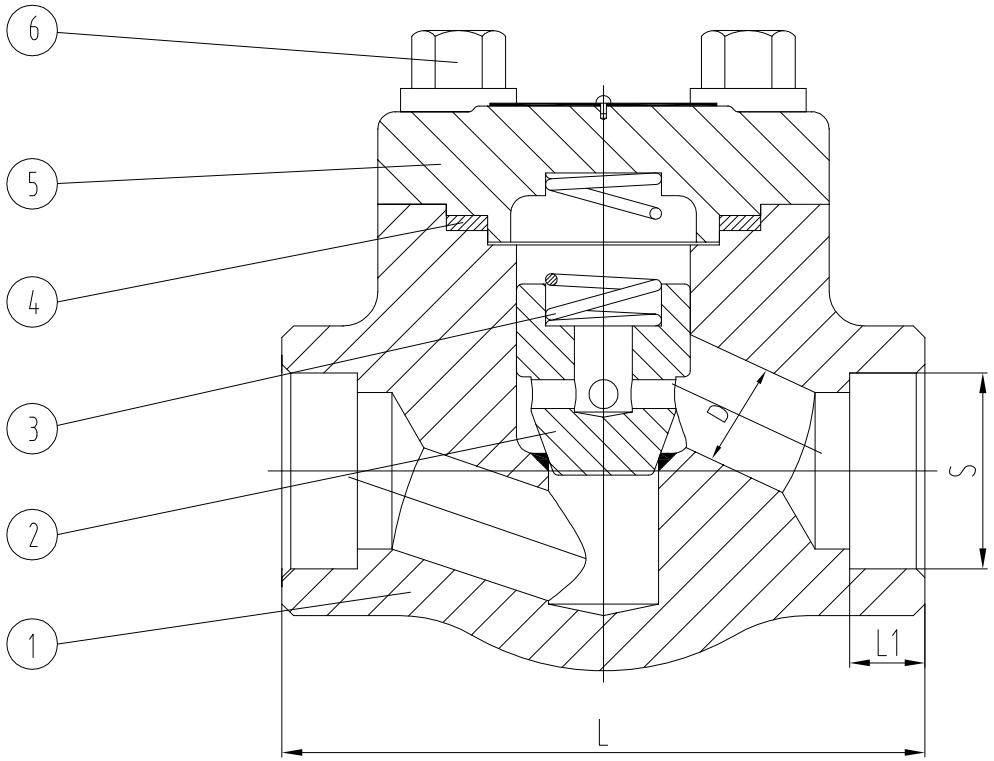

dimensions unit: mm

SIZE	L	D	S	L1
1/2"	79	10	21.8	9.6
3/4"	92	13	27.1	12.7
1"	111	17	33.8	12.7
1-1/4"	120	22	42.6	12.7
1-1/2"	152	26	48.7	12.7
2"	172	34	61.2	15.9

Specification Standard Sheet		
Shell Test Pressure	19.5	MPa
High Pressure Seal Test	14.3	
Backseat Seal Test	--	
Air Test Pressure	0.6	
Applicable Temperature	-29~500°C	
Applicable Medium	Water, Steam, Oil, etc	
Design and manufacture	API 602	
Face to face	ASME B16.10	
Pressure test	API 598	
CHECK VALVE 800LB-SW		

NO.	DATE	DESCRIPTION	PRP'D	REV'D	APP'D
	2015-06-30				

RD800SW-316

ASSEMBLING DRAWING