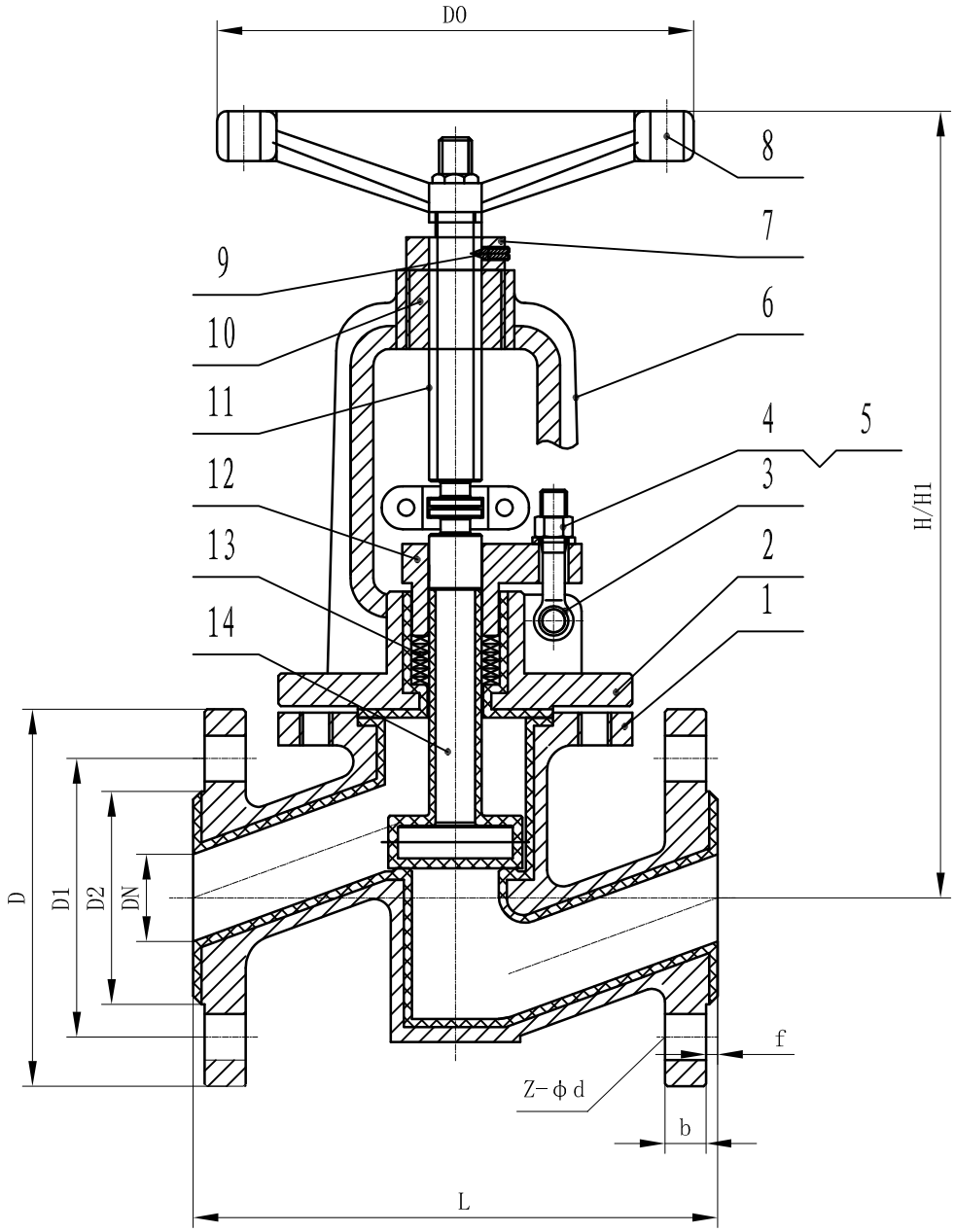

Standards	
Design And Manufacture	HG/T 3704-2005
Inspection And Test	GB/T 13927
Face To Face Dimension	DIN 3201 F1
Connection Dimension Flagned Type	HG/T 20592-1997

Test Specificiation		
Shell Test Pressure	Water	1.5 MPa
Seal Test Pressure		1.0MPa
Seal Test Pressure	Air	0.6 MPa
Spare test		15KV DC
Suitable Working Temperature		-20~180° C
Applicable Medium:	CORROSSION MEDIUM	

DN	L	D	D1	D2	f	b	z-ϕd	H	H1	D0
15	130	95	65	45	3	12	4-ϕ14	240	265	120
20	150	105	75	55	3	12	4-ϕ14	240	265	120
25	160	115	85	65	3	13	4-ϕ14	270	295	160
32	180	140	100	78	3.5	13	4-ϕ18	277	302	160
40	200	150	110	85	3.5	14	4-ϕ18	337	372	180
50	230	165	125	100	3.5	15.5	4-ϕ18	352	392	180
65	290	185	145	120	3.5	16	4-ϕ18	390	427	220
80	310	200	160	135	3.5	17	8-ϕ18	425	465	250
100	350	220	180	155	4	20	8-ϕ18	460	503	280

NO.	NAME	MATERIAL	NO.	NAME	MATERIAL
7	Nut	SS304	14	Disc	1025+PFA
6	Yoke	WCB	13	Packing	PTFE
5	Gesket	1035	12	Glgnd	WCB
4	Nut	SS304	11	Stem	420
3	Connecting bolt	SS304	10	Yoke nut	ZCuAl10Fe3
2	Bonnet	WCB+PFA	9	Bolt	SS304
1	Body	WCB+PFA	8	Hand wheel	A216 WCB

REV	DATE	BY	CHK	
				CUSTOMER:
				P.ORDER:
				OUR REF:
				SPEC/TAG:
REVISIONS				ITEM:

Date: 13.08.21

Design:QXQ

Description: Globe valve

S16F1-PFA/YFM