Szalai és Társa Kft. www.szalaikft.hu	TRICLAMP TOLDAT BSP KÜLSŐ MENETTEL KATALÓGUSLAP	CE -1417 CE-PED 97/23 EK AD2000 Mbl W.

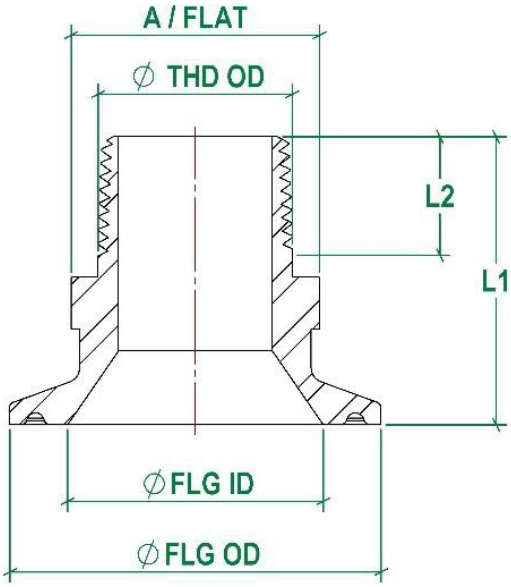

TIPUSJEL	FLG OD (mm)	FLG ID (mm)	THD OD (G Inch)	A Flat (mm)	L2 (mm)	L1 (mm)
TC25-BSP-KM-316-1/8”	25.40	15.75	1/8"	14	12	21
TC25-BSP-KM-316-1/4”	25.40	15.75	1/4"	17	13	24
TC25-BSP-KM-316-3/8”	25.40	15.75	3/8"	19	15	30
TC25-BSP-KM-316-1/2”	25.40	15.75	1/2"	24	19	30
TC25-BSP-KM-316-3/4”	25.40	15.75	3/4"	30	20	33
TC50-BSP-KM-316-1/8”	50.50	22.10	1/8"	14	12	30
TC50-BSP-KM-316-1/4”	50.50	22.10	1/4"	17	13	30
TC50-BSP-KM-316-3/8”	50.50	22.10	3/8"	19	15	30
TC50-BSP-KM-316-1/2”	50.50	22.10	1/2"	24	19	30
TC50-BSP-KM-316-3/4”	50.50	22.10	3/4"	30	20	30
TC50-BSP-KM-316-1”	50.50	22.10	1"	36	28	35
TC64-BSP-KM-316-1/2”	64.00	47.50	1/2"	24	19	40
TC64-BSP-KM-316-3/4”	64.00	47.50	3/4"	30	20	40
TC64-BSP-KM-316-1”	64.00	47.50	1"	36	28	40
TC64-BSP-KM-316-1.1/4”	64.00	47.50	1 1/4"	46	24	40
TC64-BSP-KM-316-1.1/2”	64.00	47.50	1 1/2"	54	24	43
TC64-BSP-KM-316-2”	64.00	47.50	2"	60	30	45
TC77-BSP-KM-316-1”	77.50	60.20	1"	36	28	35
TC77-BSP-KM-316-1.1/4”	77.50	60.20	1 1/4"	46	24	40
TC77-BSP-KM-316-1.1/2”	77.50	60.20	1 1/2"	54	24	43
TC77-BSP-KM-316-2”	77.50	60.20	2"	60	30	45
TC77-BSP-KM-316-2.1/2”	77.50	60.20	2 1/2"	75	35	48
TC91-BSP-KM-316-1”	91.00	72.90	1"	36	28	40
TC91-BSP-KM-316-1.1/4”	91.00	72.90	1 1/4"	46	24	40
TC91-BSP-KM-316-1.1/2”	91.00	72.90	1 1/2"	54	24	43
TC91-BSP-KM-316-2”	91.00	72.90	2"	60	30	45
TC91-BSP-KM-316-2.1/2”	91.00	72.90	2 1/2"	75	35	48
TC91-BSP-KM-316-3”	91.00	72.90	3"	90	35	51

Igény esetén NPT vagy metrikus menettel is gyártható

Szalai és Társa Kft 1108 Budapest, Venyige utca 3. Tel: (1) 433 3914 Fax: (1) 260 2607
e-mail: szalaikft@szalaikft.hu www.szalaikft.hu